DIRECT DRAW DISPENSER

MICRO MATIC

PRO-LINE™ E-SERIES™ 25" - 1 KEG

- Designed by beer-industry experts for performance and value.
- Integrated glass rinser: condition the glass with cold water before pouring.
- Rugged keg slide - extends floor life.
- Full-size drain tray - larger work area and improved hygiene.
- Commercial grade construction - built to last.



MDD23GR-E
Black with Glass Rinser



MDD23SGR-E
Stainless Steel with Glass Rinser

Listed by Edison Testing Laboratories.
Conforms to UL & NSF Standards.

Job Number:_____ Location: _____

Specifications

Micro Matic reserves the right to change specifications without notice.

Part No.	Finish	Doors	Shipping Weight
☐ MDD23GR-E	Black with Glass Rinser	1	78 kg 172 lbs
☐ MDD23SGR-E	Stainless Steel with Glass Rinser	1	78 kg 172 lbs

Operating Performance

Capacity of 1/2 Kegs	1
Cubic Feet (liters)	8.4 (239)
Number of Draft Towers	1
Number of Faucets	1
Beer Tower Approval	NSF 7.0 and NSF 18
Approval	ETL Listed
Condenser HP	1/6

Running Amps	2.7
Voltage	115/60/1
Plug Type	NEMA-5-15P
Cord Length	8’
Refrigerant	R290
Charge oz / grams	6.7 / 190
Thermostat	Digital

Exterior	All Models:18 gauge stainless steel top, 22 gauge solid doors, 24 gauge steel front, sides and back. Black Vinyl Models: Front, sides. Stainless Steel Models: Front, sides
Interior	20 gauge stainless steel floor, reinforced frame, 24 gauge galvanized walls
Ventilation	Back ventilated
Plumbing	Drain Tray: 3/4" NPT drain includes hose and drain bottle. Automatic condensate evaporator, no drain connection required. Evaporator condensate has been plumbed to a condensate pan located in the compressor housing.
Glass Rinser	15-20 psi water connection. It is recommended a licensed plumber connect the glass rinser to the water supply line. Always use an in-line shut-off and water pressure regulator. Micro Matic shall not be held liable for damage caused by improper installation.
Insulation	Foamed-in-place using high density, CFC-free polyurethane; 2" top, walls and floor.
Casters	Standard

Dimensions

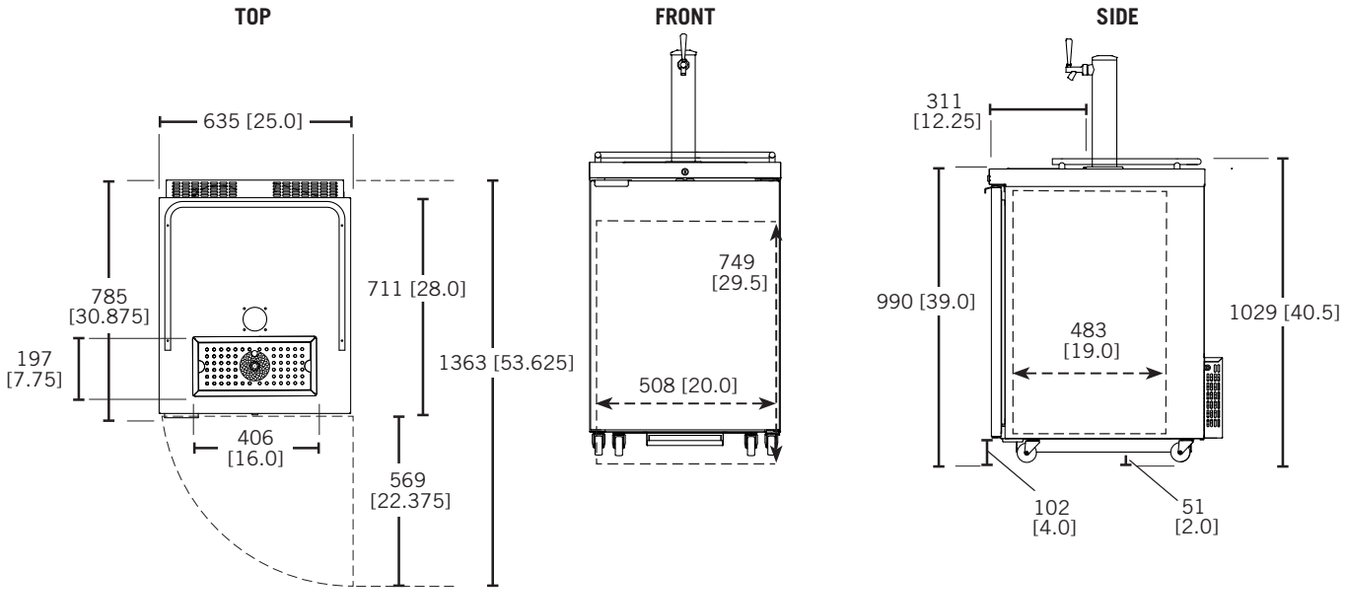

MICRO MATIC

Toll-Free: 1-866-327-4159
www.micromatic.com

West
19791 Bahama St.
Northridge, CA 91324
Tel. (818) 701-9765
Fax. (818) 701-9844

Central
10726 North Second St.
Machesney Park, IL 61115
Tel. (815) 968-7557
Fax. (815) 968-0363

Southeast
15111 Dispense Ln.
Brooksville, FL 34604
Tel. (352) 799-6331
Fax. (352) 796-2429

Northeast
4601 Saucon Creek Rd.
Center Valley, PA 18034
Tel. (610) 625-4464
Fax. (610) 625-4466

000032S-D0619 ©2019 Micro Matic USA, Inc. All Rights Reserved.